RATIO HÖN

The economical, large interlocking tile.

- Its large format (265 x 446 mm) makes this tile especially cost-effective
- Flexible gauge for fast installation, thanks to an adjustment range of 24 mm
- 5 mm adjustment tolerance for added flexibility
- Extensive colour palette: 11 colours and four surface variations
- Harmonious design inspired by the traditional Z1 model created by Ludowici
- A water channel on the side of the tile takes the pressure off the side interlock to ensure water flows away smoothly

Note: For this model, a color change was made to the NUANCE copper red. Further information can be found here: Product range info

TECHNICAL DATA

Size (appr.)	265 x 446 mm
Covering width min. approx.	221 mm
Covering width on av. approx.	223 mm
Max. coverage width (approx.)	225 mm
Min. gauge (approx.)	357 mm
Covering length on av. approx.	368 mm
Max. gauge (approx.)	380 mm
Tile requirement min. (approx.)	11.7 pcs/m²
Average tile requirement (approx.)	12.2 pcs/m²
Brickware max. approx.	12.7 pcs/m²
Unit weight (approx.)	3.3 kg/piece
Weight per m² (approx.)	40.3 kg/m²
Weight per pallet (approx.)	975 kg
Pcs per mini-pack	6 piece
Pcs per pallet	288 piece

APPLICATIONS

ADDITIONAL MEASURES ACCORDING TO CREATON MANUFACTURER'S SPECIFICATIONS	
Standard roof pitch CREATON DE in combination with additional measures according to manufacturer's specificationsStandard roof pitch CREATON DE in combination with additional measures according to manufacturer's specifications	18 °
Installation of a trussing sheet/glued sub-roof without nail seals, possible CREATON products: DUO extra, DUO longlife ND extra, TRIO extra, QUATTRO longlife extra	≥ 18 °
Installation of a trussing sheet/glued sub-roof without nail seals, possible CREATON products: DUO longlife ND extra	≥ 16 °
Installation of a trussing sheet/glued sub-roof with nail seals, possible CREATON products: DUO extra, DUO longlife ND extra, TRIO extra, QUATTRO longlife extra	≥ 16 °
Installation as a rainproof sub-roof, possible CREATON products: DUO longlife ND extra, TRIO extra, QUATTRO longlife extra	≥ 14 °
Installation as a watertight sub-roof, possible CREATON products: QUATTRO longlife extra	≥ 10 °
Installation as a watertight sub-roof welded in a 7° special solution, please observe separate installation guidelines, possible CREATON products: QUATTRO longlife extra	-

TECHNICAL INFORMATIONS

- The technical drawing shown is merely an example.
- According to the Central Association of the German Roofing Trade (ZVDH) rules for verge tiles, the distance between the inner edge of the verge lug and the outer edge of the gable wall or cladding must be at least 1 cm.
- Current national rules and standards apply to the execution of roofing work. These vary from country to country (e.g. ZVDH Rules, Austrian Standards) and must be taken into consideration during execution. As manufacturer's information, CREATON-specific information about the execution of the sub-roof is also applicable and is complementary to these. You can find them in our Roof Planner or at www.creaton.de / www.creaton.at.
- Please consider the sample letter for the standard CREATON roof pitches.

LAF-/FLA-VALUES

LAF-/FLA VALUES IN MM WITH FALZ FOR 30X50-BATTENS									
requirement ridgetile (approx.)	DN	15°	20°	25°	30°	35°	40°	45°	50°
PH 2.6 pcs/m	LAF	60	55	50	50	45	45	40	30
PH 2.6 pcs/m	FLA	95	80	75	70	65	55	55	55

LAF-/FLA VALUES IN MM WITH FALZ FOR 40X60-BATTENS									
requirement ridgetile (approx.)	DN	15°	20°	25°	30°	35°	40°	45°	50°
PH 2.6 pcs/m	LAF	60	55	45	45	40	40	30	15
PH 2.6 pcs/m	FLA	105	90	85	80	75	65	65	65

LAF-/FLA VALUES IN MM WITH FALZ FOR 50X50-BATTENS									
requirement ridgetile (approx.)	DN	15°	20°	25°	30°	35°	40°	45°	50°
PH 2.6 pcs/m	LAF	55	50	40	40	30	30	20	5
PH 2.6 pcs/m	FLA	115	100	95	90	90	80	80	85

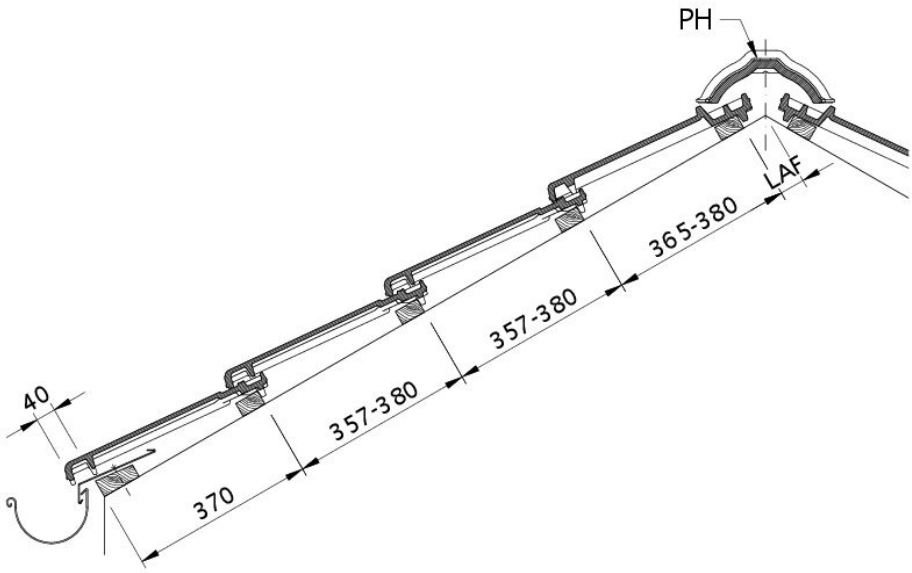

Drawing RATIO roof cross-section DQF

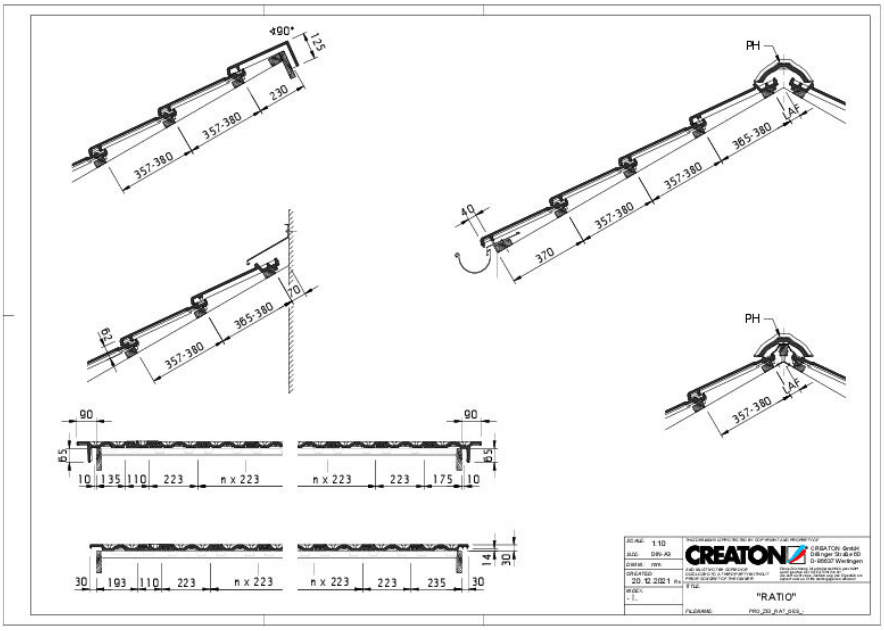

Drawing RATIO general view GES

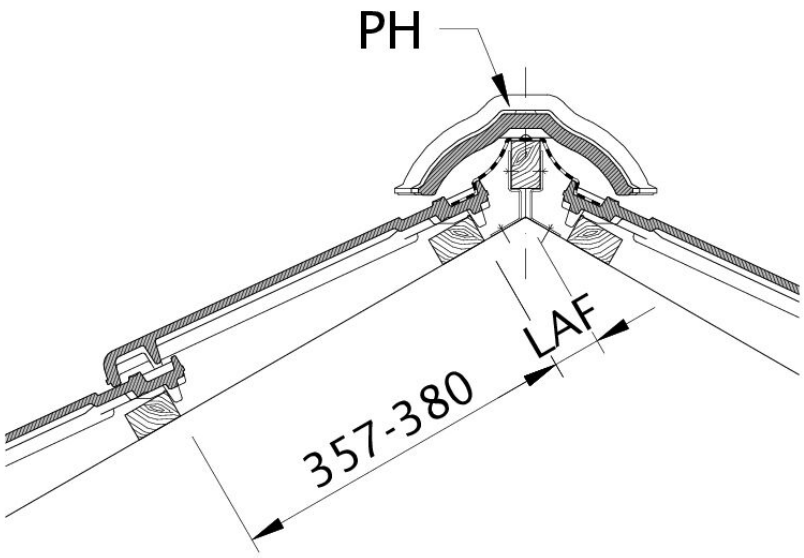

Drawing RATIO distance from batten to ridge intersection point, ridge batten spacing LAF

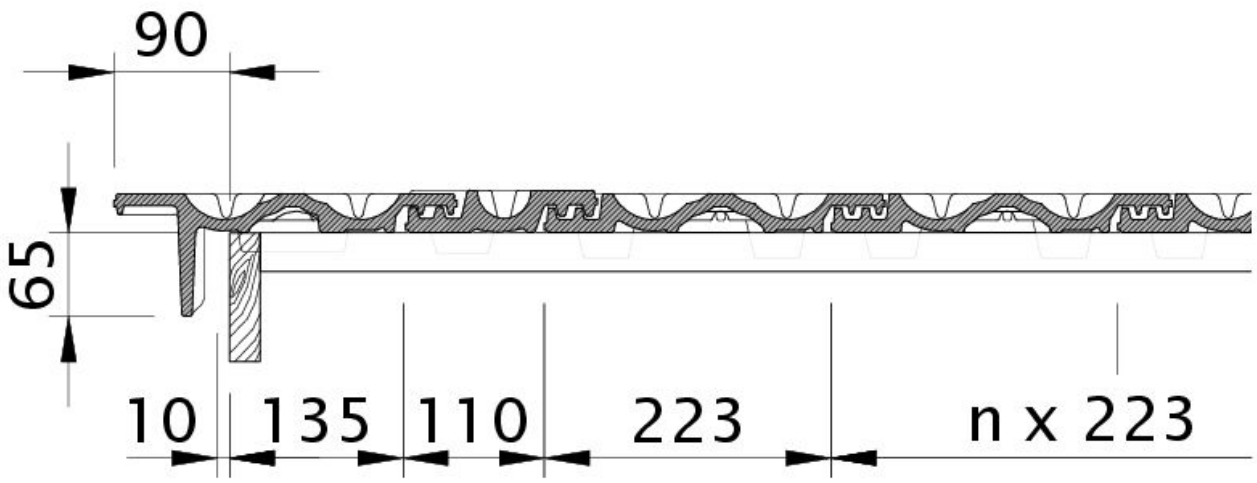

Drawing RATIO verge tile left with barge board OBL

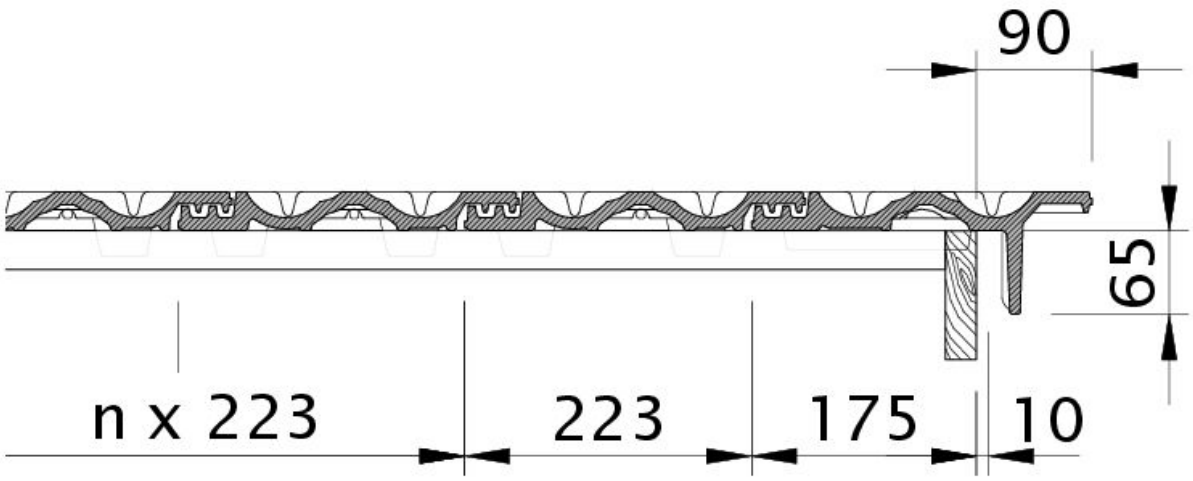

Drawing RATIO verge tile right with barge board OBR

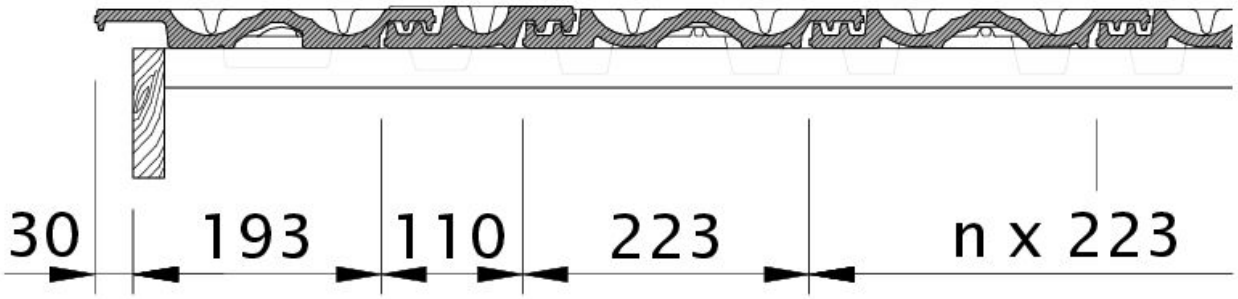

Drawing RATIO verge left with verge sheet metal and double roll ODL

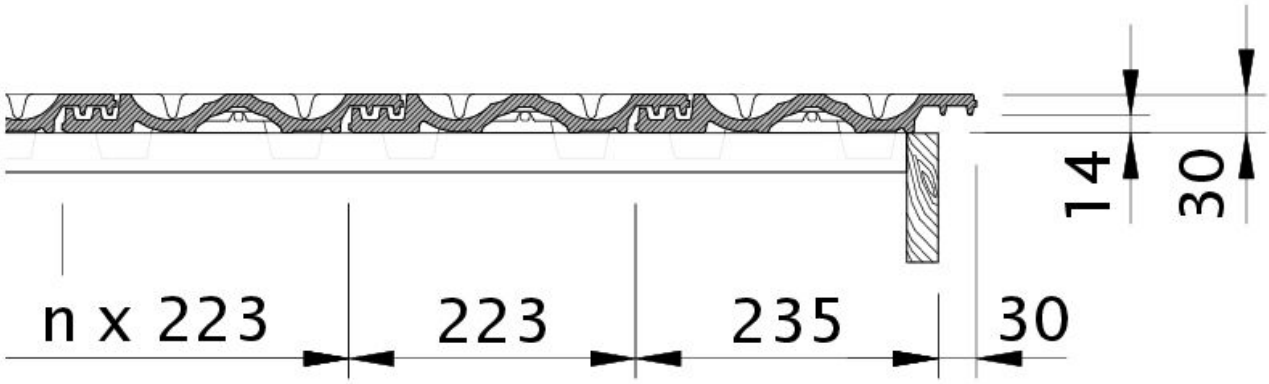

Drawing RATIO verge right with verge sheet metal and field tile OFR

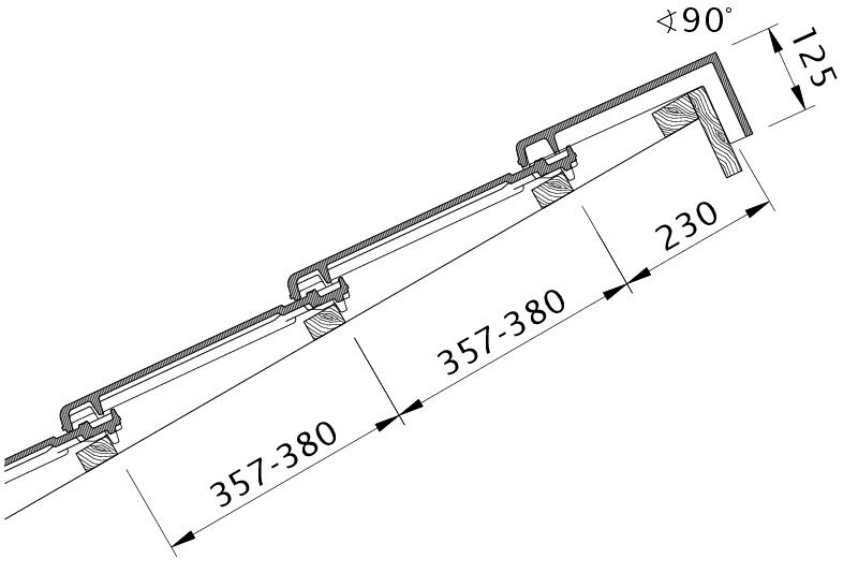

Drawing RATIO shed roof version PDA

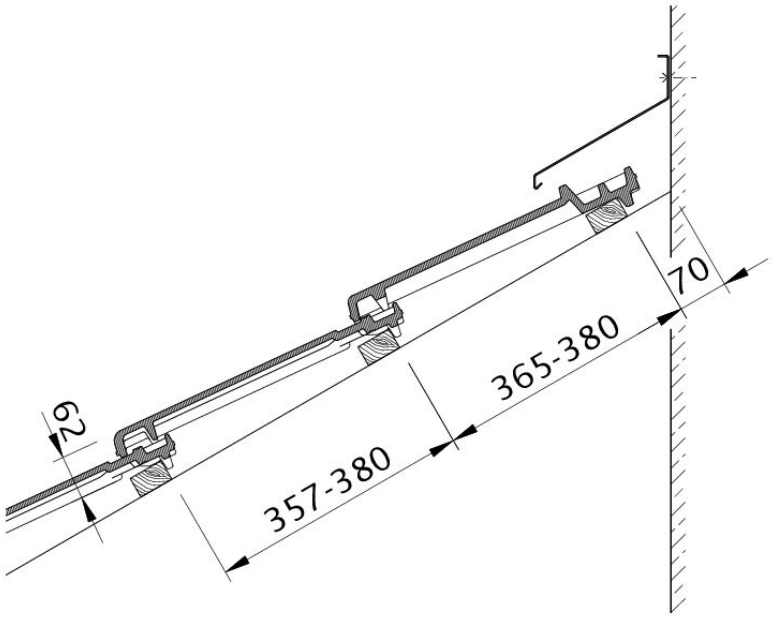

Drawing RATIO wall connection (above) with FALZ WMF